NCSX Status, Budget, & Planning

Don Rej
NCSX Project Manager

On behalf the NCSX Team
Princeton Plasma Physics Laboratory
Oak Ridge National Laboratory

Office of Fusion Energy Sciences

Budget and Planning Meeting

March 11-12, 2008

National Compact Stellarator Experiment (NCSX)

- NCSX mission:
  - Acquire physics knowledge needed to evaluate compact stellarators as a fusion concept
  - Advance understanding of 3D plasma physics for fusion and basic science
- FY09-10 work mostly for design, fabrication, assembly of NCSX major item of equipment (MIE)
  - Project led by PPPL, in partnership with ORNL
  - Complete component fabrication
  - Complete field period assembly
  - Begin machine assembly
  - Complete ancillary system design work
- Research Program
  - Preparations continue in this time period
  - Long-lead planning & design for equipment upgrades (for plasma heating campaign) to start in FY10
  - In collaboration with other US labs & universities

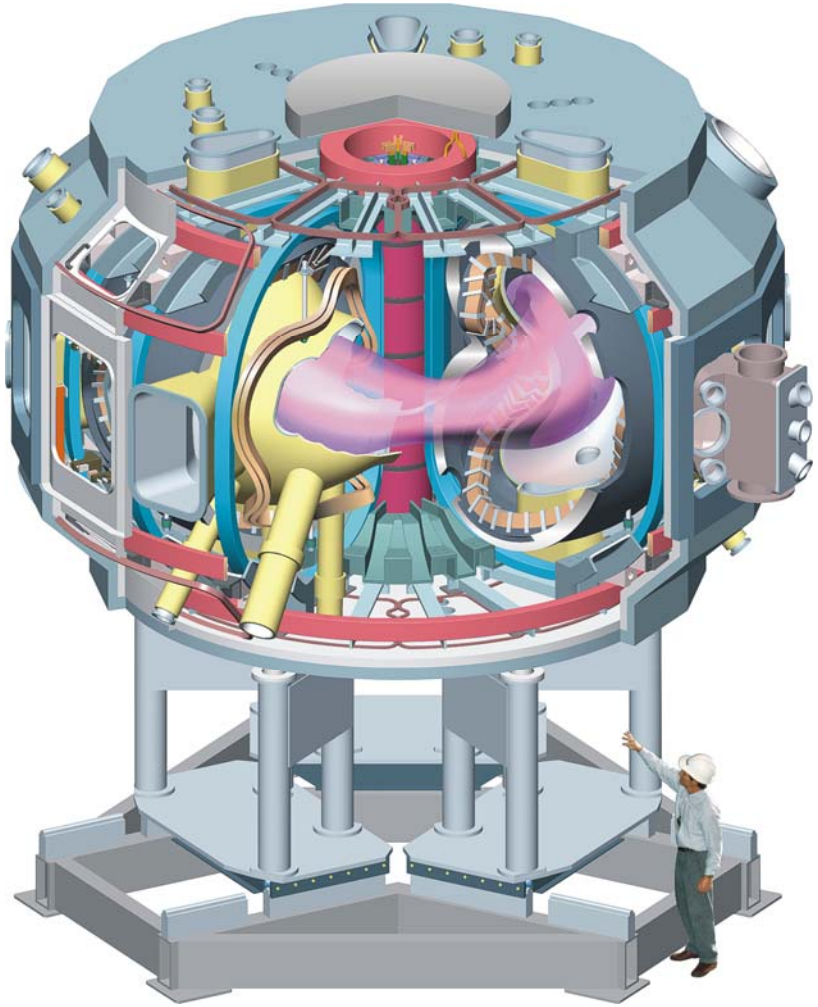

NCSX Construction Progress: Design & Manufacturing

- Vacuum Vessel Sub-Assemblies & Modular Coil Winding Forms complete
  - Vacuum vessel sector component installation (magnetic loops, heating/cooling hoses, heater tapes, thermocouples) completed except for final tests
- Modular coil production nearing completion
  - 16 (of 18) coils completed
  - Remaining coil fabrication underway and will be completed in FY08
- Toroidal field coils fabrication
  - 9 (of 18) coils completed
  - Remaining coils in production and to be delivered before Nov 08.

NCSX Construction Progress: Assembly

- Modular coil half-period assembly (*i.e.*, three modular coils) design and development completed.
- Key tasks included the design of modular coil interface hardware and the development of procedures for accurate assembly.
  - Design & process are consistent with tight tolerance requirements & large forces.
  - Construction feasibility review (Nov 07) confirmed Project's technical approach to meeting tolerance requirements.
- Assembly of half-period assemblies has begun.

NCSX Construction: Re-Baseline Status

- In FY07, Project determined that it could not meet the approved FY05 baseline and submitted a revised cost and schedule estimate.
- A series of reviews (cost & schedule, scientific mission, and engineering) were held in Aug-Oct ’07 to inform DOE decisions on the future of the project.
- In Jan ‘08, Department directed Project to submit a baseline change proposal (BCP) for decision in the second half of FY 08.
- BCP is currently in preparation and will undergo a series of reviews:
  - Princeton University External Independent Review - Mar 13-14
  - BCP submitted - March 26
  - Office of Science (Lehman) Review - April 8-10
  - OECM External Independent Review - May 20-22

Future Accomplishments thru FY10: Complete Design & Fabrication, Prepare Test Cell, Continue Assembly

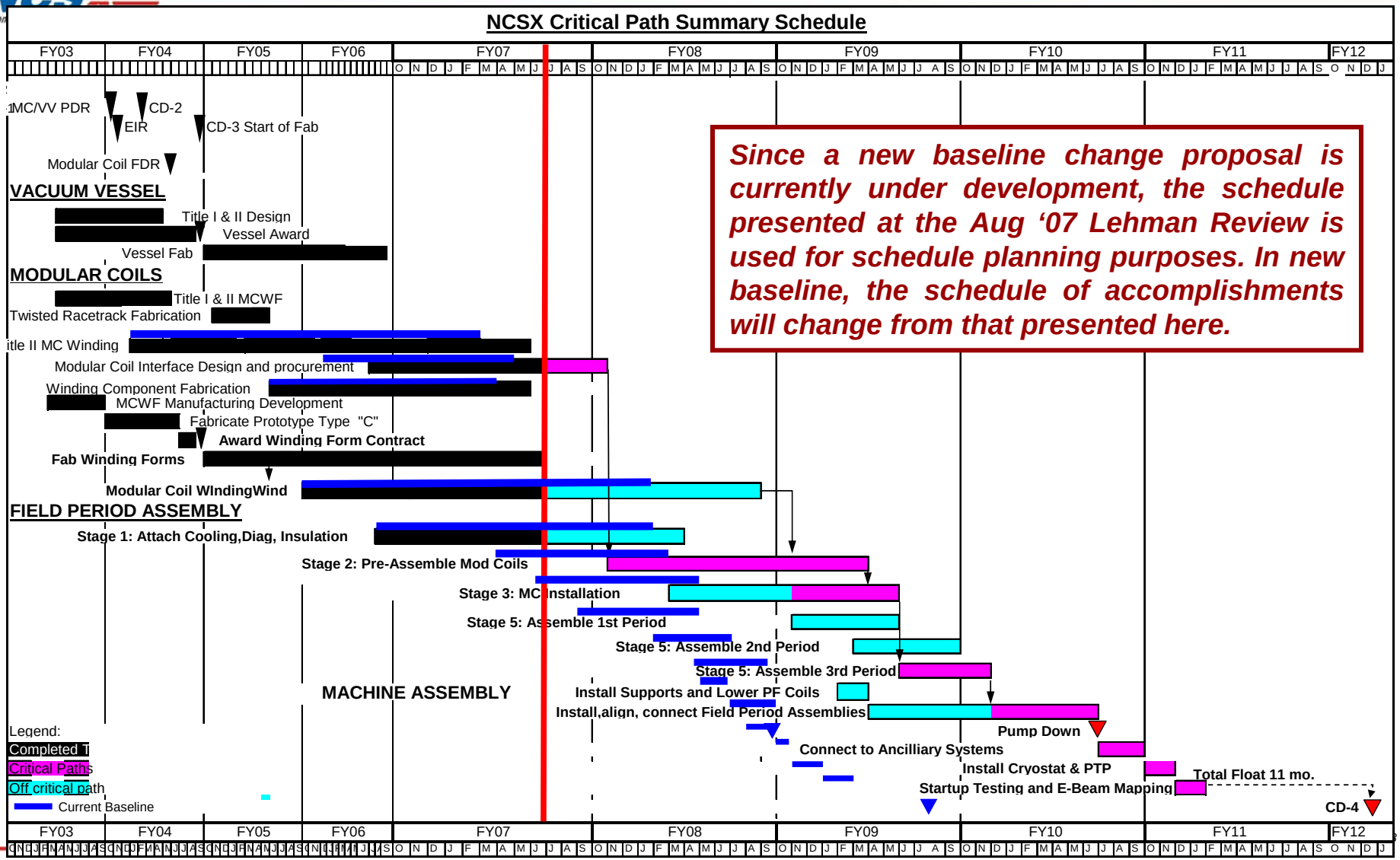

Since a new baseline change proposal is currently under development, the schedule presented at the Aug '07 Lehman Review is used for schedule planning purposes. In new baseline, the schedule of accomplishments will change from that presented here.

Future Accomplishments FY08-09: Complete Stellarator Core Design

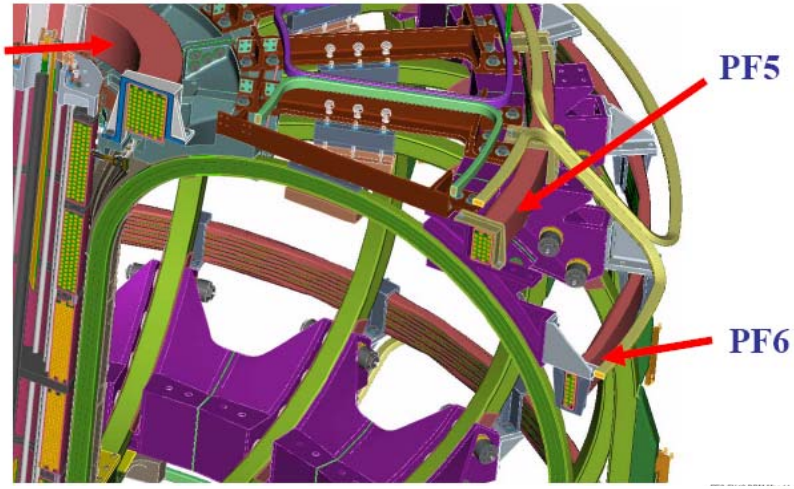

Poloidal Field Coils

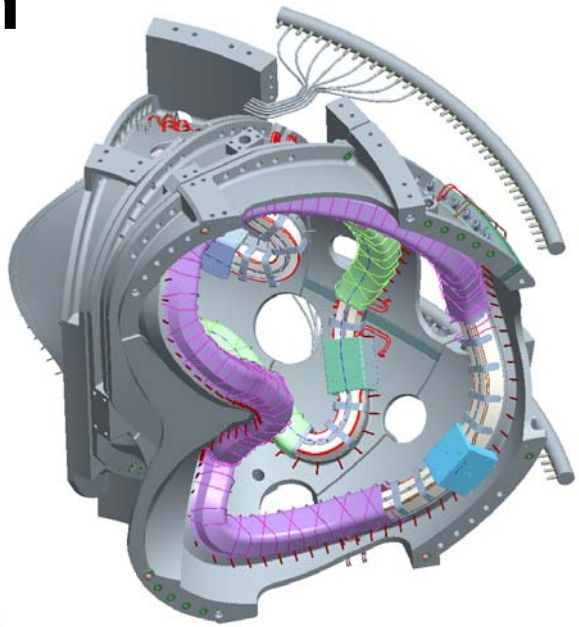

Coil Services

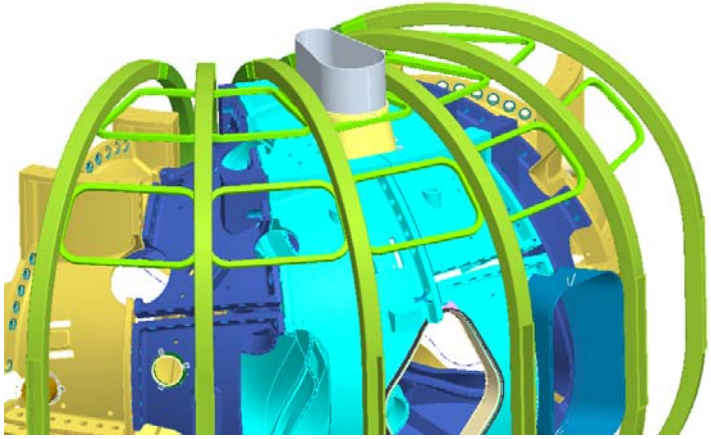

Trim Coils

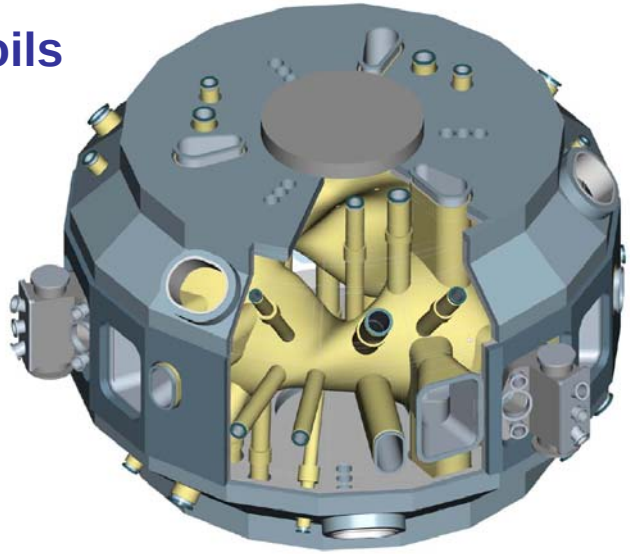

Cryostat

Future Accomplishments thru FY10: Prepare Test Cell & Continue Assembly

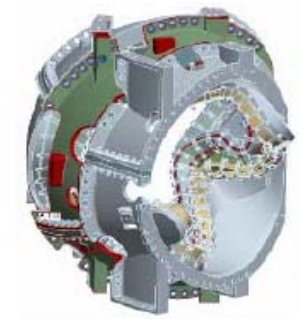

Assemble 3 coils for half field period

Now Underway!

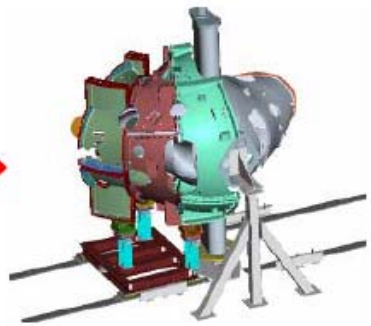

Install 3-coil set over vacuum vessel sector

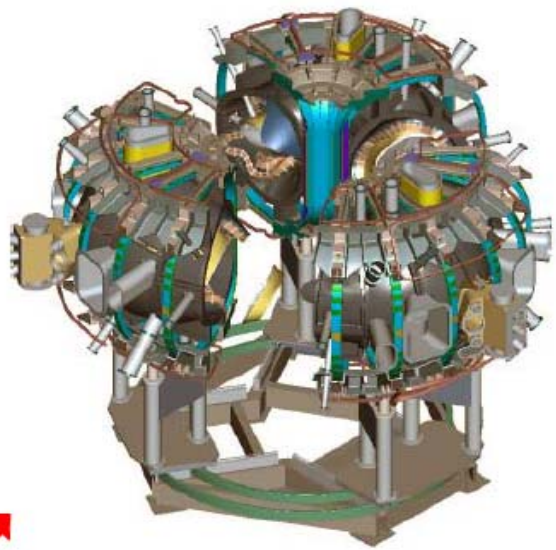

Connect 3 field periods

Connect 2nd 3-coil set over vacuum vessel sector

Add ports & TF coils to complete a field period

Require coil current center accurate to ±1.5 mm

Technical Progress: Research Preparation focuses on first heating campaign

- Experimental program planning and defining equipment upgrades needed beyond the MIE project.
  - Phase 1: Plasma & stellarator acceptance testing
  - Phase 2: Magnetic configuration studies
  - Phase 3: Initial NBI heating, plasma diagnostics (magnetics, Thomson Scattering, spectroscopy, bolometry)
  - Phase 4: ECH & Additional NBI Heating, new diagnostics (DNB, MSE, CHERS, ECE)
- Research Community input solicited in FY07 to establish priorities & plans for NCSX research, the required equipment upgrades, and prospective collaborator interests
  - **First NCSX Research Forum**
  - Meetings supported pre-conceptual cost & schedule estimates for Phase 3, presented at FY07 Lehman Review
- FY08 research prep effort has focused on re-scheduling upgrade work to be consistent with new funding guidance and a new baseline being developed for the MIE project.

Future Accomplishments thru FY10: Research Preparation

- Physics studies
  - NCSX team will study physics issues important for planning of initial experimental campaigns. Key topics include e-beam mapping, field errors, trim coils, diagnostics, and boundary physics.
  - Maintain up-to-date experimental plan for NCSX, keeping abreast of physics developments in the overall stellarator and tokamak programs and factoring those developments into NCSX planning.
- Soliciting input from National Research Community.
  - Conduct second NCSX research forum (FY10) to continue the community-wide planning of NCSX research campaigns and obtain feedback on NCSX plans and priorities, and consult with collaborator to determine opportunities.
  - Following forum, submit a program letter to DOE identifying the needed collaborator work scopes, in anticipation of an DOE request for proposals for NCSX collaboration.

National Budgets

By Activity

	FY-2008	FY-2009	FY-2010
NCSX Program Total	**16.6**	**20.3**	**20.8**
Facilities Total	**15.9**	**19.6**	**19.8**
Major Item of Equipment	15.9	19.6	16.8
Facility Operations			0.5
Facility Equipment			1.5
Diagnostic Equipment			1.0
Science Total	**0.713**	**0.692**	**1.000**
Physics planning & design	0.713	0.692	1.000

By Institution

	FY-2008	FY-2009	FY-2010
NCSX Program Total	**16.6**	**20.3**	**20.8**
PPPL	**14.4**	**18.8**	**18.4**
Facilities PPPL	**13.9**	**18.4**	**17.8**
Major Item of Equipment	13.9	18.4	15.9
Facility Operations			0.5
Facility Equipment			0.8
Diagnostic Equipment			0.6
Science PPPL	**0.453**	**0.440**	**0.600**
Physics planning & design	0.453	0.440	0.600
ORNL	**2.2**	**1.4**	**2.3**
Facilities ORNL	**2.0**	**1.2**	**2.0**
Major Item of Equipment	2.0	1.2	0.9
Facility Equipment			0.7
Diagnostic Equipment			0.4
Science ORNL	**0.220**	**0.213**	**0.300**
Physics planning & design	0.220	0.213	0.300
LLNL	**0.040**	**0.039**	**0.10**
Science LLNL	**0.040**	**0.039**	**0.100**
Physics planning & design	0.040	0.039	0.100

- Overall budget envelope (NCSX Program Total) as specified by OFES.
- Our planning goal: **Optimize schedule for initial heating physics results (Phase 3).**
- Distribution among activities & institutions may change based on new baseline.

New NCSX Project Manager's assessment after 5 weeks on the job

- Overcoming recent technical challenges has led to cost increases & schedule delays.
- PPPL-ORNL team has had a good track record in these solving problems and maintaining high quality - no show stoppers to date. Impressed by quality of individual team members. They *can* do the job.
- The challenge is to develop confident cost & schedule estimates, recognizing project complexity and design maturity, and managing to them.
- NCSX design is much more mature than in Aug 07, but it is not compete. Assembly sequence plan is incomplete until we finish design.
- Peer review has strengthened confidence and ability to successfully complete project.
- Cost & schedule estimates are now more rigorous with a defensible basis of estimate.
- Institutional sponsorship from PPPL, Princeton U, and ORNL is strong.
- There've been good investments to improve project management; further work needed to:
  - Implement best practices from other DOE SC projects (*e.g.,* SNS)
  - Continue external peer review and outreach to other communities to help anticipate problems and find opportunities to recover schedule
  - Bolster risk management
  - Quantify remaining design immaturity by a risk-based contingency analysis
  - Pull remaining design and R&D ahead of construction
  - Elicit Job Manager buy-in, empowerment, & accountability
  - Provide transparency with customer & stakeholders

Summary

- One by one, the Project team has overcome technical problems & produced a technically high-quality product. In the future, this needs to be done without cost overruns and schedule delays.
  - Further project management investments are being made
  - Many high risks, responsible for cost & schedule increases, are retired
- NCSX construction continues
  - Modular coil fabrication nearly complete & first field period assembly underway
  - Remaining design complete in FY09; component delivery to support assembly
- Research planning continues, with emphasis on plasma heating upgrades and experimental campaigns with advanced diagnostics
- External cost & schedule, scientific mission, and engineering reviews were held in 2007 to inform DOE decision on the future of the project
  - Baseline change proposal due later this month.
- There is substantially more confidence in our estimates today than in 2007; all remaining design immaturity being quantified in a risk-based contingency analysis